REV.	REVISION DESCRIPTION	REDRAWN	APPROVED
*	*	*	*

DEBURR ALL
.5 CHAMFER UNLESS SPECIFIED
USE WITH 06-13 TRIUMPH 675 FRONT FENDER
215 MOUNT BRACKET WIDTH

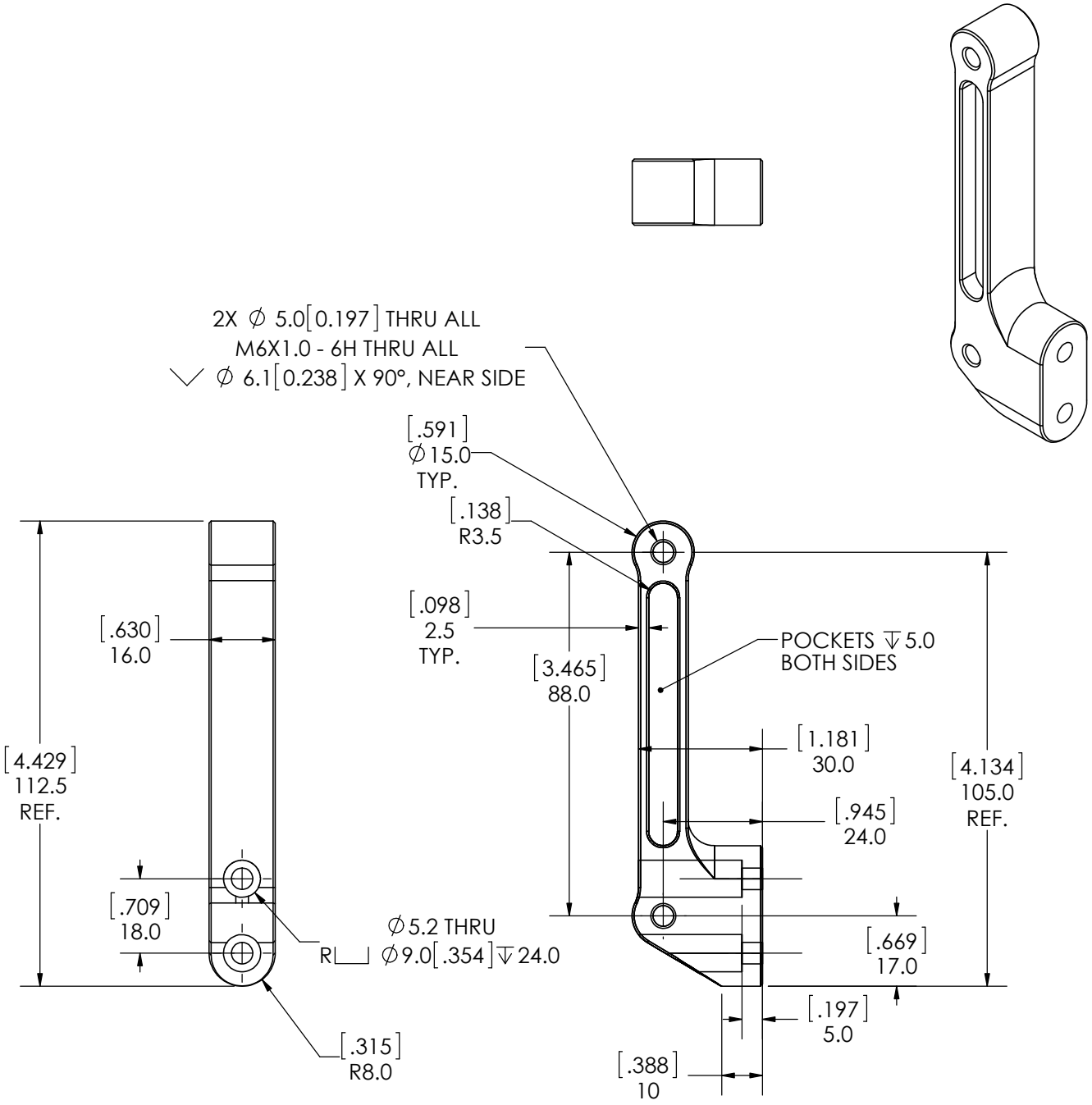

TOLERANCES:
0 = ± .5
0.0 = ± .1
0.00 = ± .05

Dimensions are in MILLIMETERS [IN] unless specified

The information contained in this drawing is the sole property of Race Tech. Any reproduction in part or whole without written permission is prohibited.

RACE TECH

1501 Pomona Road, Corona, CA 92880
951.279.6655 fax: 951.279.7171

FK BOTTOM FENDER MOUNT-06-13 TRI 675

MATERIAL:	6061-T6 ALUMINUM	DRAWN:	PT 3-11-14
FINISH:	ANODIZE	APPROVED:	*
COLOR:	SPEC COLOR BY ORDER	ECR#:	*

SCALE:1:2	PART NO. FPFB FM03	FINISHED P/N *	DWG. NO. 2206	REV. *
SHEET 1 OF 1	FILE FPFB FM03 FENDER MOUNT TRI 675.slddrw			